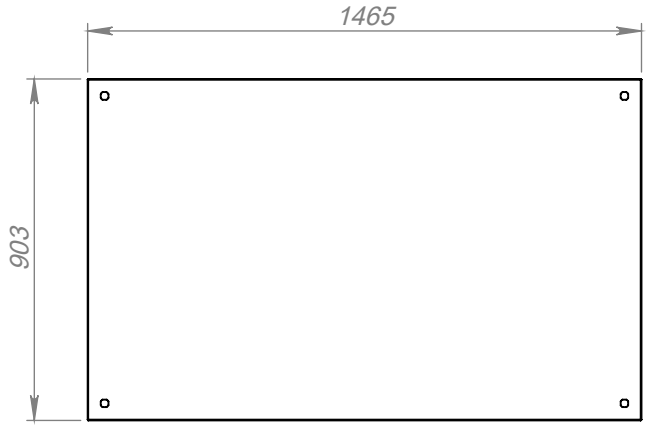
1465
903

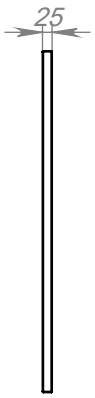
25

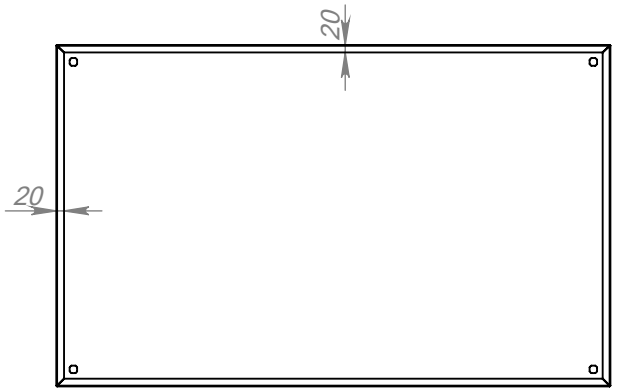
20
20

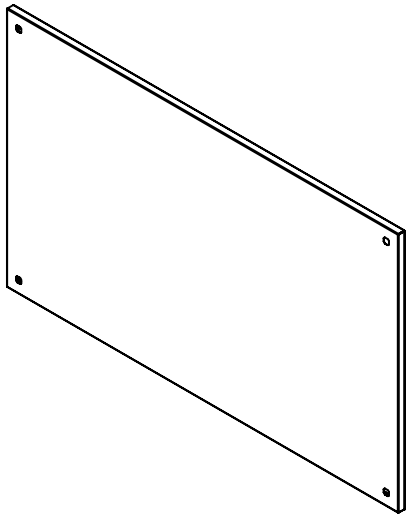

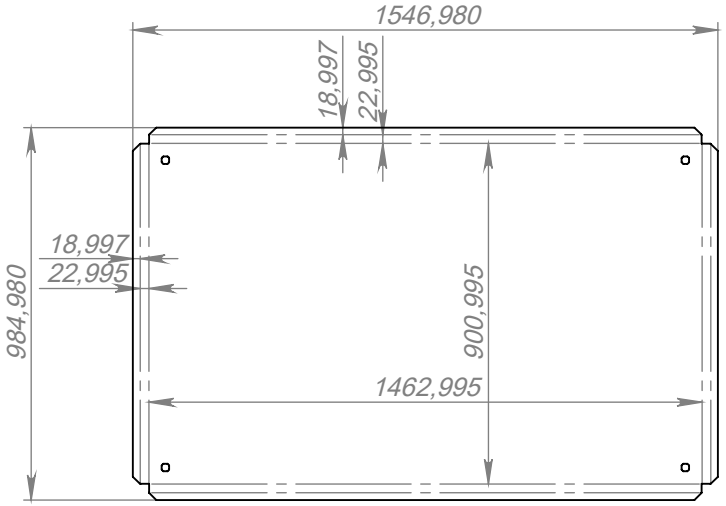
1546,980
18,997
22,995
18,997
22,995
984,980
900,995
1462,995